DATA SHEET

ZFmB_8 | 600 - 1340 W
Wire Resistor

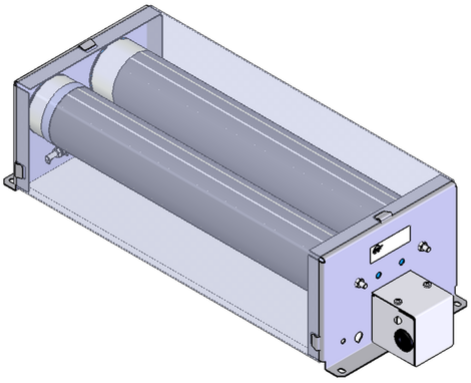

Article-No.		ds4000 1282			
Type		ZFmB 60x300	ZFmB 6	ZFmB 7	ZFmB 8
Pulse Power (W) T_a ~ 40 °C *referred to a cycle duration of 120s Approximate value (depending on resistance)	ED 6 %*	5700	7980	10450	12730
	ED 15 %*	2940	4120	5390	6570
	ED 25 %*	1920	2690	3520	4290
	ED 40 %*	1320	1850	2420	2950
	ED 60 %*	900	1260	1650	2010
Nominal continuous power (W) T_a ~ 40 °C		600	840	1100	1340
Rated continuous current (A) T_a ~ 40 °C		0,3 - 50	0,3 - 50	0,3 - 50	0,3 - 50
Resistance Values at 20°C (Ohm)		0.24 - 7200	0.34 - 10120	0.43 - 13100	0.55 - 16000
Tolerance of resistance at 20°C		±10 %			
Degree of protection (EN 60529) (in the accordingly screwed on state)		IP 20			
Max. permissible operating voltage		600 V AC / 800 V DC			
Cooling		natural convection			
Housing temperature at nominal continuous power T_a ~ 40 °C		≤200 °C			
Electrical terminal		2,5 mm² / PE M4			
Operation temperature range		-25 … +40 °C			
Testing voltage		2,7 kV AC 1 s			
Mounting positions					

Subject to technical modifications

HEINE Resistors GmbH · Otto-Mohr-Straße 5 · 01237 Dresden · Germany · Tel: +49 (0) 351 3192-0 · E-Mail: info@heine-resistors.com
Gerichtsstand Dresden · HRB 3315 · USt-IdNr: DE 181022992 · St.-Nr 203/110/04604
IBAN: DE64 8508 0000 04022658 00 · BIC: DRESDEFF850
Geschäftsführer: Patrick Rudolph
Ein Unternehmen der Knorr-Bremse AG

DATA SHEET

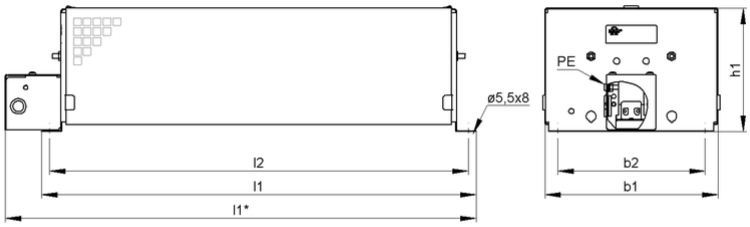

Article-No.		ds4000 1282			
Type		ZFmB 60x300	ZFmB 6	ZFmB 7	ZFmB 8
Length [mm]	l1*	≤410	≤510	≤610	≤710
	l1	≤350	≤450	≤550	≤650
	l2	326	426	526	626
Width [mm]	b1	≤182	≤182	≤182	≤182
	b2	150	150	150	150
Height [mm]	h1	≤130	≤130	≤130	≤130
Weight approx. [kg]		4,8	6,8	8,8	10,8
Last update		2016-01-14			

Mounting instruction:
The resistor should be protected by appropriate safety measures against overloading.
Do not mount the resistor with any obstruction in the air inlet or air outlet area.

Tube resistors have to mount in a horizontal position.
The resistor has to be grounded.

HEINE Resistors GmbH · Otto-Mohr-Straße 5 · 01237 Dresden · Germany · Tel: +49 (0) 351 3192-0 · E-Mail: info@heine-resistors.com
Gerichtsstand Dresden · HRB 3315 · USt-IdNr: DE 181022992 · St.-Nr 203/110/04604
IBAN: DE64 8508 0000 04022658 00 · BIC: DRESDEFF850
Geschäftsführer: Patrick Rudolph
Ein Unternehmen der Knorr-Bremse AG