DATA SHEET

GWHS 60x30-K | 150 - 400 W
Aluminium Resistor
cRUus 600 / 1000 V

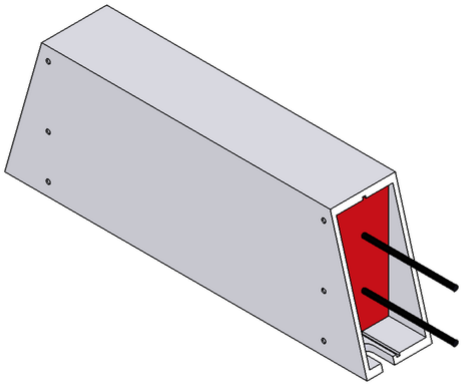

Article-No.		ds3000 3116			
Type		GWHS 167	GWHS 217	GWHS 267	GWHS 337
Pulse Power (W) T_a ~ 40 °C *referred to a cycle duration of 120s Approximate value (depending on resistance)	ED 6 %*	1350	2250	2700	3600
	ED 15 %*	750	1250	1500	2000
	ED 25 %*	450	750	900	1200
	ED 40 %*	300	500	600	800
Nominal continuous power (W) T_a ~ 40 °C		150	250	300	400
Resistance Values at 20°C (Ohm)		2.5 - 910	4.7 - 1000	6.2 - 1300	7.8 - 1800
Tolerance of resistance at 20°C		±10%			
Degree of protection (EN 60529) (in the accordingly screwed on state)		IP 54			
Max. permissible operating voltage		UL 600 / 1000 V			
Cooling		natural convection			
Housing temperature at nominal continuous power T_a ~ 40 °C		ca. 340 °C			
Electrical terminal		2x AWG 16 / l=25 cm			
Operation temperature range		-25 ... +40 °C			
Testing voltage		2.7 kV AC 1 s			
Approvals/marking		UL; CSA			
Mounting positions					

Subject to technical modifications

HEINE Resistors GmbH · Otto-Mohr-Straße 5 · 01237 Dresden · Germany · Tel: +49 (0) 351 3192-0 · E-Mail: info@heine-resistors.com
Gerichtsstand Dresden · HRB 3315 · USt-IdNr: DE 181022992 · St.-Nr 203/110/04604
IBAN: DE64 8508 0000 04022658 00 · BIC: DRESDEFF850
Geschäftsführer: Patrick Rudolph
Ein Unternehmen der Knorr-Bremse AG

DATA SHEET

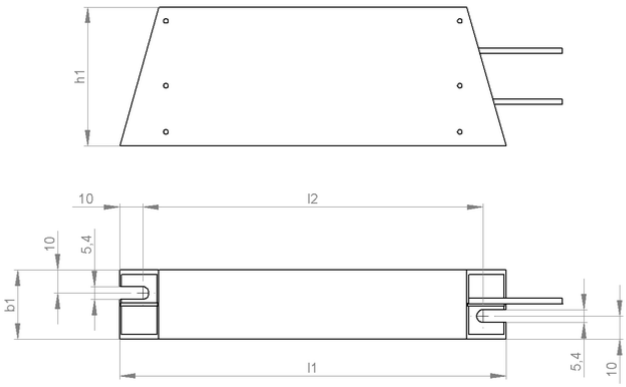

Article-No.		ds3000 3116			
Type		GWHS 167	GWHS 217	GWHS 267	GWHS 337
Length [mm]	l1	167	217	267	337
	l2	150	200	250	320
Width [mm]	b1	30	30	30	30
Height [mm]	h1	60	60	60	60
Weight approx. [kg]		0.5	0.7	0.9	1.1
Isolation resistance		>10 M Ohm			
Last update		2015-02-25			

Mounting instruction:
The distance between the two fixing points increase at 0,85 mm / 100 mm while heating (mounting with fixed and movable bearing).
The resistor should be protected by appropriate safety measures against overloading.
Do not mount the resistor with any obstruction in the air inlet or air outlet area.
Mount the resistor on a plane area.
The resistor has to be grounded.

HEINE Resistors GmbH · Otto-Mohr-Straße 5 · 01237 Dresden · Germany · Tel: +49 (0) 351 3192-0 · E-Mail: info@heine-resistors.com
Gerichtsstand Dresden · HRB 3315 · USt-IdNr: DE 181022992 · St.-Nr 203/110/04604
IBAN: DE64 8508 0000 04022658 00 · BIC: DRESDEFF850
Geschäftsführer: Patrick Rudolph
Ein Unternehmen der Knorr-Bremse AG