DATA SHEET

GWS 80x15-G | 100 - 200 W
Aluminium Resistor
cRUus 600 V

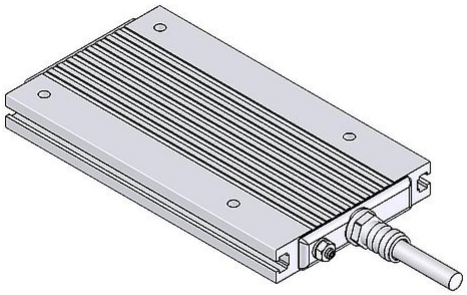

Article-No.		ds3000 3722	
Type		GWS 146	GWS 252
Pulse Power (W) T_a ~ 40 °C *referred to a cycle duration of 120s Approximate value (depending on resistance)	ED 6 %*	900	1800
	ED 15 %*	500	1000
	ED 25 %*	300	600
	ED 35 %*	250	500
	ED 40 %*	200	400
Nominal continuous power (W) T_a ~ 40 °C		100	200
Resistance Values at 20°C (Ohm)		3.6 - 910	6.8 - 1200
Tolerance of resistance at 20°C		±10 %	
Degree of protection (EN 60529) (in the accordingly screwed on state)		IP 65	
Max. permissible operating voltage		UL 600 V	
Cooling		natural convection	
Housing temperature at nominal continuous power T_a ~ 40 °C		<300 °C	
Electrical terminal		3x AWG 18; l=50 cm	
Operation temperature range		-25 ... +40 °C	
Testing voltage		2.7 kV AC 1 s	
Approvals/marking		UL; CSA	
Mounting positions			

Subject to technical modifications

HEINE Resistors GmbH · Otto-Mohr-Straße 5 · 01237 Dresden · Germany · Tel: +49 (0) 351 3192-0 · E-Mail: info@heine-resistors.com
Gerichtsstand Dresden · HRB 3315 · USt-IdNr: DE 181022992 · St.-Nr 203/110/04604
IBAN: DE64 8508 0000 04022658 00 · BIC: DRESDEFF850
Geschäftsführer: Patrick Rudolph
Ein Unternehmen der Knorr-Bremse AG

MICROELETTRICA

DATA SHEET

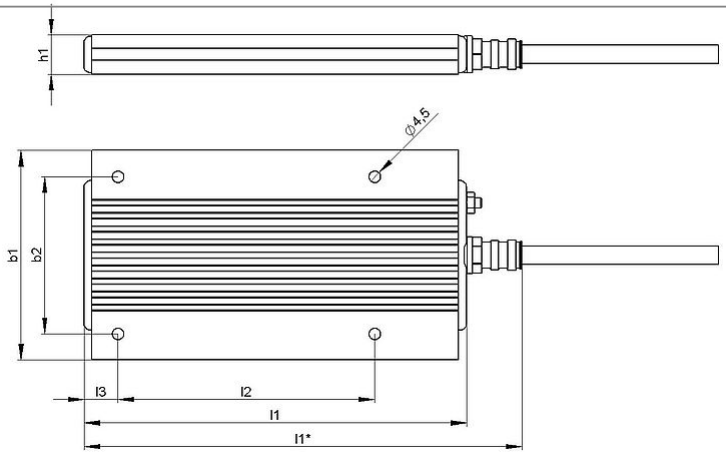

Article-No.		ds3000 3722	
Type		GWS 146	GWS 252
Length [mm]	l1*	<170	<276
	l1	146	252
	l2	98	204
	l3	13	13
Width [mm]	b1	80	80
	b2	60	60
Height [mm]	h1	15	15
Weight approx. [kg]		0.5	0.8
Isolation resistance		>10 M Ohm	
Last update		2014-01-22	

Mounting instruction:
The distance between the two fixing points increase at 0,85 mm / 100 mm while heating (mounting with fixed and movable bearing).
The resistor should be protected by appropriate safety measures against overloading.
Do not mount the resistor with any obstruction in the air inlet or air outlet area.
Mount the resistor on a plane area.
The resistor has to be grounded.

HEINE Resistors GmbH · Otto-Mohr-Straße 5 · 01237 Dresden · Germany · Tel: +49 (0) 351 3192-0 · E-Mail: info@heine-resistors.com
Gerichtsstand Dresden · HRB 3315 · USt-IdNr: DE 181022992 · St.-Nr 203/110/04604
IBAN: DE64 8508 0000 04022658 00 · BIC: DRESDEFF850
Geschäftsführer: Patrick Rudolph
Ein Unternehmen der Knorr-Bremse AG