DATA SHEET

GWS 80x15-K | 100 - 200 W
Aluminium Resistor
cRUus 600 / 1000 V

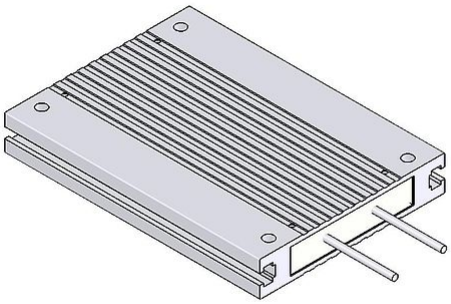

Article-No.		ds3000 3712		
Type		GWS 110	GWS 130	GWS 216
Pulse Power (W) T_a ~ 40 °C *referred to a cycle duration of 120s Approximate value (depending on resistance)	ED 6 %*	900	1080	1800
	ED 15 %*	500	600	1000
	ED 25 %*	300	360	600
	ED 35 %*	250	300	500
	ED 40 %*	200	240	400
Nominal continuous power (W) T_a ~ 40 °C		100	120	200
Resistance Values at 20°C (Ohm)		3.6 - 910	3.6 - 910	6.8 - 1200
Tolerance of resistance at 20°C		±10 %		
Degree of protection (EN 60529) (in the accordingly screwed on state)		IP 54		
Max. permissible operating voltage		UL 600 / 1000 V		
Cooling		natural convection		
Housing temperature at nominal continuous power T_a ~ 40 °C		<300 °C		
Electrical terminal		2x AWG 18; l=25 cm		
Operation temperature range		-25 ... +40 °C		
Testing voltage		2.7 kV AC 1 s		
Approvals/marking		UL; CSA		
Mounting positions				

Subject to technical modifications

HEINE Resistors GmbH · Otto-Mohr-Straße 5 · 01237 Dresden · Germany · Tel: +49 (0) 351 3192-0 · E-Mail: info@heine-resistors.com
Gerichtsstand Dresden · HRB 3315 · USt-IdNr: DE 181022992 · St.-Nr 203/110/04604
IBAN: DE64 8508 0000 04022658 00 · BIC: DRESDEFF850
Geschäftsführer: Patrick Rudolph
Ein Unternehmen der Knorr-Bremse AG

DATA SHEET

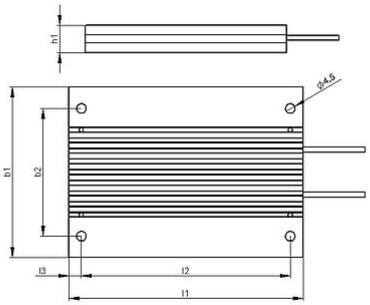

Article-No.		ds3000 3712		
Type		GWS 110	GWS 130	GWS 216
Length [mm]	l1	110	130	216
	l2	98	118	204
	l3	6	6	6
Width [mm]	b1	80	80	80
	b2	60	60	60
Height [mm]	h1	15	15	15
Weight approx. [kg]		0.3	0.4	0.6
Isolation resistance		>10 M Ohm		
Last update		2014-01-22		

Mounting instruction:
The distance between the two fixing points increase at 0,85 mm / 100 mm while heating (mounting with fixed and movable bearing).
The resistor should be protected by appropriate safety measures against overloading.
Do not mount the resistor with any obstruction in the air inlet or air outlet area.
Mount the resistor on a plane area.
The resistor has to be grounded.

HEINE Resistors GmbH · Otto-Mohr-Straße 5 · 01237 Dresden · Germany · Tel: +49 (0) 351 3192-0 · E-Mail: info@heine-resistors.com
Gerichtsstand Dresden · HRB 3315 · USt-IdNr: DE 181022992 · St.-Nr 203/110/04604
IBAN: DE64 8508 0000 04022658 00 · BIC: DRESDEFF850
Geschäftsführer: Patrick Rudolph
Ein Unternehmen der Knorr-Bremse AG