MICROELETTRICA

DATA SHEET

STG 1x1 | 6.8 - 27.2 kW
Steel Grid Resistor

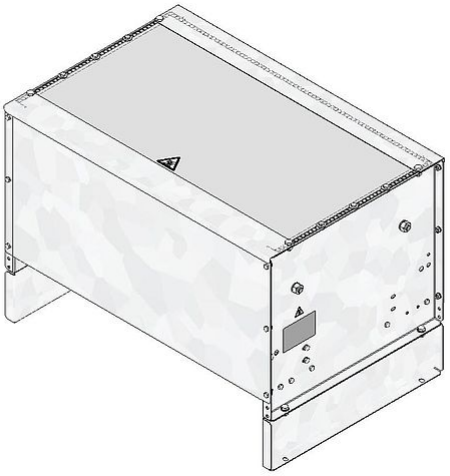

Article-No.		ds1000 1110			
Type		STG 111	STG 121	STG 131	STG 141
Pulse Power (kW) T_a ~ 40 °C *referred to a cycle duration of 120s Approximate value (depending on resistance)	ED 6 %*	53.7	107.4	161.2	214.9
	ED 15 %*	28.6	57.1	85.7	114.2
	ED 25 %*	20.4	40.8	61.2	81.6
	ED 40 %*	15	29.9	44.9	59.8
Nominal continuous power (kW) T_a ~ 40 °C		6.8	13.6	20.4	27.2
Resistance Values at 20°C (Ohm)		0.1 - 55	0.2 - 73	0.2 - 49	0.3 - 36
Tolerance of resistance at 20°C		±10 %			
Degree of protection (EN 60529) (in the accordingly screwed on state)		IP 20			
Max. permissible operating voltage		EN 1000 V DC			
Cooling		natural convection			
Housing temperature at nominal continuous power T_a ~ 40 °C		≤250 °C			
Electrical terminal		bolt clamp M6, M8, M10, M12 / PE M6, M8, M10			
Operation temperature range		-25 ... +40 °C			
Testing voltage		2.7 kV AC 1 s			
Approvals/marking		CE			
Mounting positions					

Subject to technical modifications

HEINE Resistors GmbH · Otto-Mohr-Straße 5 · 01237 Dresden · Germany · Tel: +49 (0) 351 3192-0 · E-Mail: info@heine-resistors.com
Gerichtsstand Dresden · HRB 3315 · USt-IdNr: DE 181022992 · St.-Nr 203/110/04604
IBAN: DE64 8508 0000 04022658 00 · BIC: DRESDEFF850
Geschäftsführer: Patrick Rudolph
Ein Unternehmen der Knorr-Bremse AG

DATA SHEET

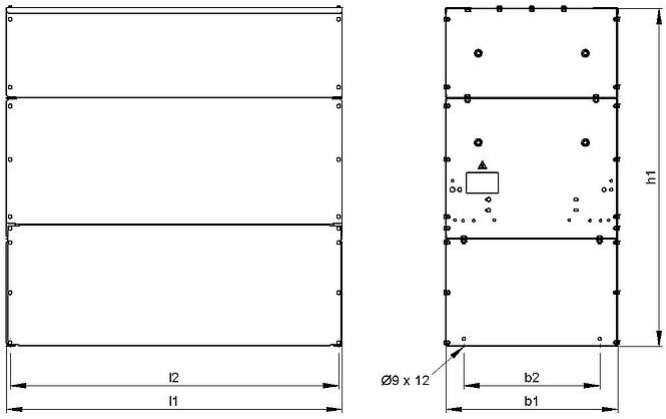

Article-No.		ds1000 1110			
Type		STG 111	STG 121	STG 131	STG 141
Length [mm]	l1	330	530	740	940
	l2	310	510	720	920
Width [mm]	b1	≤485	≤485	≤485	≤485
	b2	380	380	380	380
Height [mm]	h1	≤520	≤520	≤520	≤520
Weight approx. [kg]		19	25	32	42
Last update		2016-01-26			

Mounting instruction:
The resistor should be protected by appropriate safety measures against overloading.
Do not mount the resistor with any obstruction in the air inlet or air outlet area.
The resistor has to be grounded.

HEINE Resistors GmbH · Otto-Mohr-Straße 5 · 01237 Dresden · Germany · Tel: +49 (0) 351 3192-0 · E-Mail: info@heine-resistors.com
Gerichtsstand Dresden · HRB 3315 · USt-IdNr: DE 181022992 · St.-Nr 203/110/04604
IBAN: DE64 8508 0000 04022658 00 · BIC: DRESDEFF850
Geschäftsführer: Patrick Rudolph
Ein Unternehmen der Knorr-Bremse AG