MICROELETTRICA

DATA SHEET

RWS_8 | 300 - 670 W
Wire Resistor

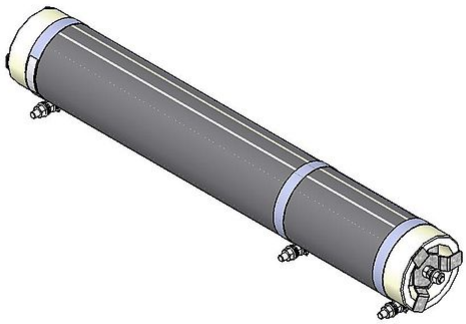

Article-No.		ds4000 0181			
Type		RWS 60x300	RWS 6	RWS 7	RWS 8
Pulse Power (W) T_a ~ 40 °C *referred to a cycle duration of 120s Approximate value (depending on resistance)	ED 6 %*	2850	3990	5230	6370
	ED 15 %*	1470	2060	2700	3280
	ED 25 %*	960	1340	1760	2140
	ED 40 %*	660	920	1210	1470
	ED 60 %*	450	630	830	1010
Nominal continuous power (W) T_a ~ 40 °C		300	420	550	670
Rated continuous current (A) T_a ~ 40 °C		0.3 - 25	0.3 - 25	0.3 - 25	0.3 - 25
Resistance Values at 20°C (Ohm)		0.47 - 3600	0.68 - 5060	0.86 - 6550	1.1 - 8000
Tolerance of resistance at 20°C		±10%			
Degree of protection (EN 60529) (in the accordingly screwed on state)		IP 00			
Max. permissible operating voltage		600 V AC / 800 V DC			
Cooling		natural convection			
Electrical terminal		M4 / M5			
Operation temperature range		-25 ... +40 °C			
Testing voltage		2.7 kV AC 1s			
Mounting positions					

Subject to technical modifications

HEINE Resistors GmbH · Otto-Mohr-Straße 5 · 01237 Dresden · Germany · Tel: +49 (0) 351 3192-0 · E-Mail: info@heine-resistors.com
Gerichtsstand Dresden · HRB 3315 · USt-IdNr: DE 181022992 · St.-Nr 203/110/04604
IBAN: DE64 8508 0000 04022658 00 · BIC: DRESDEFF850
Geschäftsführer: Patrick Rudolph
Ein Unternehmen der Knorr-Bremse AG

DATA SHEET

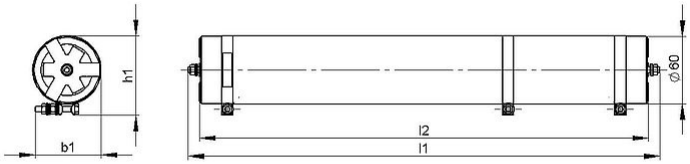

Article-No.		ds4000 0181			
Type		RWS 60x300	RWS 6	RWS 7	RWS 8
Length [mm]	l1	320	420	520	620
	l2	300	400	500	600
Width [mm]	b1	62	62	62	62
Height [mm]	h1	85	85	85	85
Weight approx. [kg]		1.5	2.5	3	3.5
Last update		2016-01-13			

Mounting instruction:
The resistor should be protected by appropriate safety measures against overloading.
Do not mount the resistor with any obstruction in the air inlet or air outlet area.

Tube resistors have to mount in a horizontal position.
The resistor has to be grounded.

HEINE Resistors GmbH · Otto-Mohr-Straße 5 · 01237 Dresden · Germany · Tel: +49 (0) 351 3192-0 · E-Mail: info@heine-resistors.com
Gerichtsstand Dresden · HRB 3315 · USt-IdNr: DE 181022992 · St.-Nr 203/110/04604
IBAN: DE64 8508 0000 04022658 00 · BIC: DRESDEFF850
Geschäftsführer: Patrick Rudolph
Ein Unternehmen der Knorr-Bremse AG