MICROELETTRICA

# DATA SHEET

## RW_8 | 300 - 670 W
## Wire Resistor

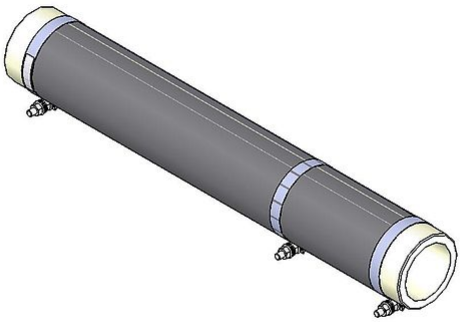

| Article-No. | | ds4000 0180 | | | |
|---|---|---|---|---|---|
| Type | | RW 60x300 | RW 6 | RW 7 | RW 8 |
| Pulse Power (W) $T_a$ ~ 40 °C<br>*referred to a<br>cycle duration of 120s<br>Approximate value (depending on resistance) | ED 6 %* | 2850 | 3990 | 5230 | 6370 |
| | ED 15 %* | 1470 | 2060 | 2700 | 3280 |
| | ED 25 %* | 960 | 1340 | 1760 | 2140 |
| | ED 40 %* | 660 | 920 | 1210 | 1470 |
| | ED 60 %* | 450 | 630 | 830 | 1010 |
| Nominal continuous power (W) $T_a$ ~ 40 °C | | 300 | 420 | 550 | 670 |
| Rated continuous current (A) $T_a$ ~ 40 °C | | 0.3 - 25 | 0.3 - 25 | 0.3 - 25 | 0.3 - 25 |
| Resistance Values at 20°C (Ohm) | | 0.47 - 3600 | 0.68 - 5060 | 0.86 - 6550 | 1.1 - 8000 |
| Tolerance of resistance at 20°C | | ±10% | | | |
| Degree of protection (EN 60529) (in the accordingly screwed on state) | | IP 00 | | | |
| Max. permissible operating voltage | | 600 V AC / 800 V DC | | | |
| Cooling | | natural convection | | | |
| Electrical terminal | | M4 / M5 | | | |
| Operation temperature range | | -25 ... +40 °C | | | |
| Testing voltage | | 2.7 kV AC 1s | | | |
| Mounting positions | | | | | |

Subject to technical modifications



HEINE Resistors GmbH · Otto-Mohr-Straße 5 · 01237 Dresden · Germany · Tel: +49 (0) 351 3192-0 · E-Mail: info@heine-resistors.com
Gerichtsstand Dresden · HRB 3315 · USt-IdNr: DE 181022992 · St.-Nr 203/110/04604
IBAN: DE64 8508 0000 04022658 00 · BIC: DRESDEFF850
Geschäftsführer: Patrick Rudolph
Ein Unternehmen der Knorr-Bremse AG

# DATA SHEET

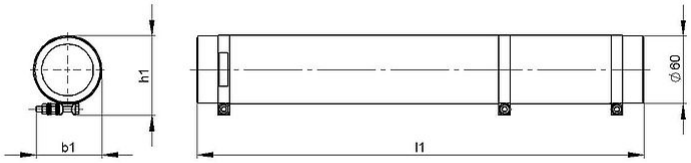


| Article-No. | | ds4000 0180 | | | |
|---|---|---|---|---|---|
| Type | | RW 60x300 | RW 6 | RW 7 | RW 8 |
| Length [mm] | l1 | 298 | 398 | 498 | 598 |
| Width [mm] | b1 | 62 | 62 | 62 | 62 |
| Height [mm] | h1 | 85 | 85 | 85 | 85 |
| Weight approx. [kg] | | 1.4 | 2 | 2.6 | 3.1 |
| Last update | | 2016-01-13 | | | |

Mounting instruction:
The resistor should be protected by appropriate safety measures against overloading.
Do not mount the resistor with any obstruction in the air inlet or air outlet area.

Tube resistors have to mount in a horizontal position.
The resistor has to be grounded.



HEINE Resistors GmbH · Otto-Mohr-Straße 5 · 01237 Dresden · Germany · Tel: +49 (0) 351 3192-0 · E-Mail: info@heine-resistors.com
Gerichtsstand Dresden · HRB 3315 · USt-IdNr: DE 181022992 · St.-Nr 203/110/04604
IBAN: DE64 8508 0000 04022658 00 · BIC: DRESDEFF850
Geschäftsführer: Patrick Rudolph
Ein Unternehmen der Knorr-Bremse AG