MICROELETTRICA

DATA SHEET

GWHS 120x30-K | 500 - 1000 W
Aluminium Resistor
cRUus 600 / 1000 V

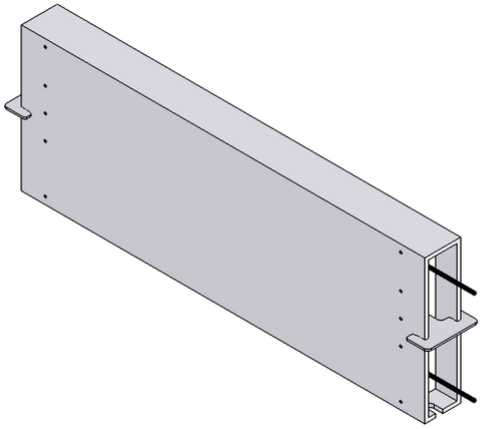

Article-No.		ds3000 3406			
Type		GWHS 217-120x30	GWHS 267-120x30	GWHS 337-120x30	GWHS 407-120x30
Pulse Power (W) T_a ~ 40 °C *referred to a cycle duration of 120s Approximate value (depending on resistance)	ED 6 %*	4500	5400	7200	9000
	ED 15 %*	2500	3000	4000	5000
	ED 25 %*	1500	1800	2400	3000
	ED 40 %*	1000	1200	1600	2000
Nominal continuous power (W) T_a ~ 40 °C		500	600	800	1000
Resistance Values at 20°C (Ohm)		2.3 - 720	3.1 - 600	3.9 - 450	4.7 - 360
Tolerance of resistance at 20°C		±10 %			
Degree of protection (EN 60529) (in the accordingly screwed on state)		IP 20			
Max. permissible operating voltage		UL 600 / 1000 V			
Cooling		natural convection			
Housing temperature at nominal continuous power T_a ~ 40 °C		~360 °C			
Electrical terminal		2x AWG 16 / l=25 cm			
Operation temperature range		-25 ... +40 °C			
Testing voltage		2,7 kV AC 1 s			
Approvals/marking		UL; CSA			
Mounting positions					

Subject to technical modifications

HEINE Resistors GmbH · Otto-Mohr-Straße 5 · 01237 Dresden · Germany · Tel: +49 (0) 351 3192-0 · E-Mail: info@heine-resistors.com
Gerichtsstand Dresden · HRB 3315 · USt-IdNr: DE 181022992 · St.-Nr 203/110/04604
IBAN: DE64 8508 0000 04022658 00 · BIC: DRESDEFF850
Geschäftsführer: Patrick Rudolph
Ein Unternehmen der Knorr-Bremse AG

DATA SHEET

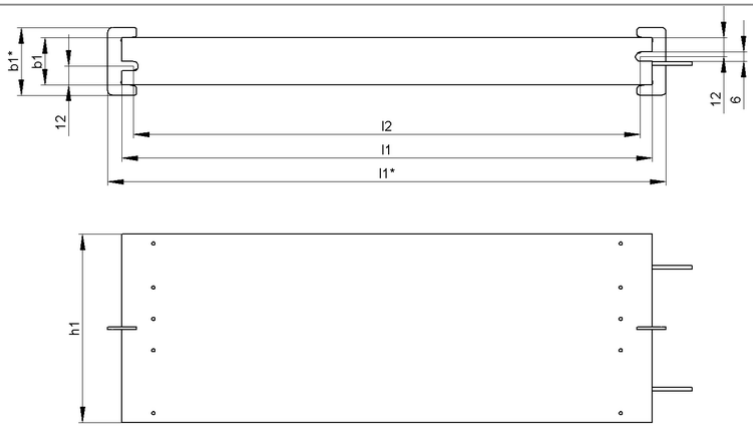

Article-No.		ds3000 3406			
Type		GWHS 217-120x30	GWHS 267-120x30	GWHS 337-120x30	GWHS 407-120x30
Length [mm]	l1*	≤237	≤287	≤357	≤427
	l1	217	267	337	407
	l2	205	255	325	395
Width [mm]	b1*	≤45	≤45	≤45	≤45
	b1	30	30	30	30
Height [mm]	h1	120	120	120	120
Weight approx. [kg]		1,4	1,8	2,2	2,6
Isolation resistance		≥10 MΩ			
Last update		2016-01-22			

Mounting instruction:
The distance between the two fixing points increase at 0,85 mm / 100 mm while heating (mounting with fixed and movable bearing).
The resistor should be protected by appropriate safety measures against overloading.
Do not mount the resistor with any obstruction in the air inlet or air outlet area.
Mount the resistor on a plane area.
The resistor has to be grounded.

HEINE Resistors GmbH · Otto-Mohr-Straße 5 · 01237 Dresden · Germany · Tel: +49 (0) 351 3192-0 · E-Mail: info@heine-resistors.com
Gerichtsstand Dresden · HRB 3315 · USt-IdNr: DE 181022992 · St.-Nr 203/110/04604
IBAN: DE64 8508 0000 04022658 00 · BIC: DRESDEFF850
Geschäftsführer: Patrick Rudolph
Ein Unternehmen der Knorr-Bremse AG