MICROELETTRICA

DATA SHEET

RAF 100_8UL | 0.65 - 1.1 kW
Wire Resistor

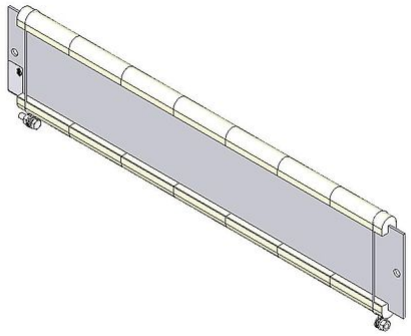

Article-No.		ds2003 0013			
Type		RAF 100/5	RAF 100/6	RAF 100/7	RAF 100/8
Pulse Power (kW) T_a ~ 40 °C *referred to a cycle duration of 120s Approximate value (depending on resistance)	ED 6 %*	5.2	6.4	7.6	8.8
	ED 15 %*	2.9	3.6	4.3	5
	ED 25 %*	2	2.4	2.9	3.3
	ED 40 %*	1.4	1.7	2	2.3
Nominal continuous power (kW) T_a ~ 40 °C		0.7	0.8	1	1.1
Resistance Values at 20°C (Ohm)		2.5 - 110	3 - 136	3.5 - 160	4 - 184
Tolerance of resistance at 20°C		±10 %			
Degree of protection (EN 60529) (in the accordingly screwed on state)		IP 00			
Max. permissible operating voltage		UL 600 / 1000 V			
Cooling		natural convection			
Electrical terminal		M5			
Operation temperature range		-25 ... +40 °C			
Testing voltage		3.6 kV AC 1 s			
Approvals/marking		UL; CSA			
Mounting positions					

Subject to technical modifications

HEINE Resistors GmbH · Otto-Mohr-Straße 5 · 01237 Dresden · Germany · Tel: +49 (0) 351 3192-0 · E-Mail: info@heine-resistors.com
Gerichtsstand Dresden · HRB 3315 · USt-IdNr: DE 181022992 · St.-Nr 203/110/04604
IBAN: DE64 8508 0000 04022658 00 · BIC: DRESDEFF850
Geschäftsführer: Patrick Rudolph
Ein Unternehmen der Knorr-Bremse AG

DATA SHEET

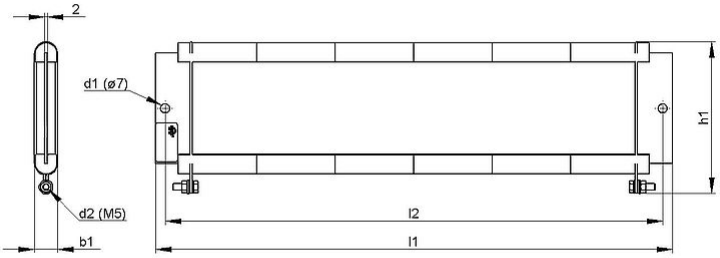

Article-No.		ds2003 0013			
Type		RAF 100/5	RAF 100/6	RAF 100/7	RAF 100/8
Length [mm]	l1	<340	<400	<460	<520
	l2	320	380	440	500
Width [mm]	b1	<20	<20	<20	<20
Height [mm]	h1	~116	~116	~116	~116
Weight approx. [kg]		0.8	0.95	1.2	1.35
Last update		2016-01-26			

Mounting instruction:
The resistor should be protected by appropriate safety measures against overloading.
Do not mount the resistor with any obstruction in the air inlet or air outlet area.

The resistor has to be grounded.

HEINE Resistors GmbH · Otto-Mohr-Straße 5 · 01237 Dresden · Germany · Tel: +49 (0) 351 3192-0 · E-Mail: info@heine-resistors.com
Gerichtsstand Dresden · HRB 3315 · USt-IdNr: DE 181022992 · St.-Nr 203/110/04604
IBAN: DE64 8508 0000 04022658 00 · BIC: DRESDEFF850
Geschäftsführer: Patrick Rudolph
Ein Unternehmen der Knorr-Bremse AG